MLY1 - 18mm ø ROD STYLE

MLY1 - 18mm ø ROD STYLE

MLY1FS

MLY1C

DESCRIPTION

The MLY1 series linear transducers are compact and are suitable for installation in small spaces in order to detect small shifts. The side connection creates a through-rod structure with double rod support, giving this transducer greater overall strength and durability. This series is ideal for small mechanical devices, valves, test tools, and benches. Installation is simplified by the lack of electrical signal variation at output outside theorectical electrical stroke

STANDARD FEATURES

10 to 450mm STROKE
OUTPUT - 1kOHM, 5kOHM (50-450mm)
LINEARITY +/-0.05%
INFINITE RESOLUTION
CONNECTOR - 4 PIN, CABLE
DISPLACEMENT SPEED - 5m/s
MECHANICAL LINKAGE - M8
OPERATING TEMP - -30 to +100OC
IP40

OPTIONS

IP65

MECHANICAL/ELECTRICAL DATA

MODEL		10	25	50	75	100	125	150	175	200	225	250	275	300	350	375	400	425	450
TOTAL ELECTRICAL TRAVEL	mm	11	26	51	76	101	126	151	177	202	227	252	277	302	353	378	403	428	453
ACTIVE ELECTRICAL TRAVEL	mm	10	25	50	75	100	125	150	176	201	226	251	276	301	352	347	402	427	452
RESISTANCE .20%	k	1	1	5	5	5	5	5	5	5	5	5	5	5	5	5	5	5	5
INDEPENDENT LINEARITY	.%	0.3	0.2	0.1	0.1	0.1	0.05	0.05	0.05	0.05	0.05	0.05	0.05	0.05	0.05	0.05	0.05	0.05	0.05
MECHANICAL TRAVEL	mm	15	30	55	80	105	130	155	180	205	230	255	280	305	355	380	405	430	455
RESOLUTION		Infinite																	
RECOMMENDED CURSOR CURRENT	A	<1																	
TEMPERATURE RANGE		-30°C to 100°C (-22°F to 212°F)																	
DIMENSIONS (A)	mm	48	63	88	113	138	163	183	213	238	263	288	313	338	388	413	438	463	488
DIMENSIONS (C)	mm	77	107	157	207	257	307	357	407	457	507	557	607	657	757	807	857	905	957

MLY1 - ORDER CODE

MLY1X(X) - XX(X) - X

ELECTRICAL CONNECTION	Length mm(Inch)	SEAL
C - 4Pin	See Table Above	<blank> - IP40
FS - 1M Cable		P - IP65

MLY1 - 18mm ø ROD STYLE

DIMENSIONS

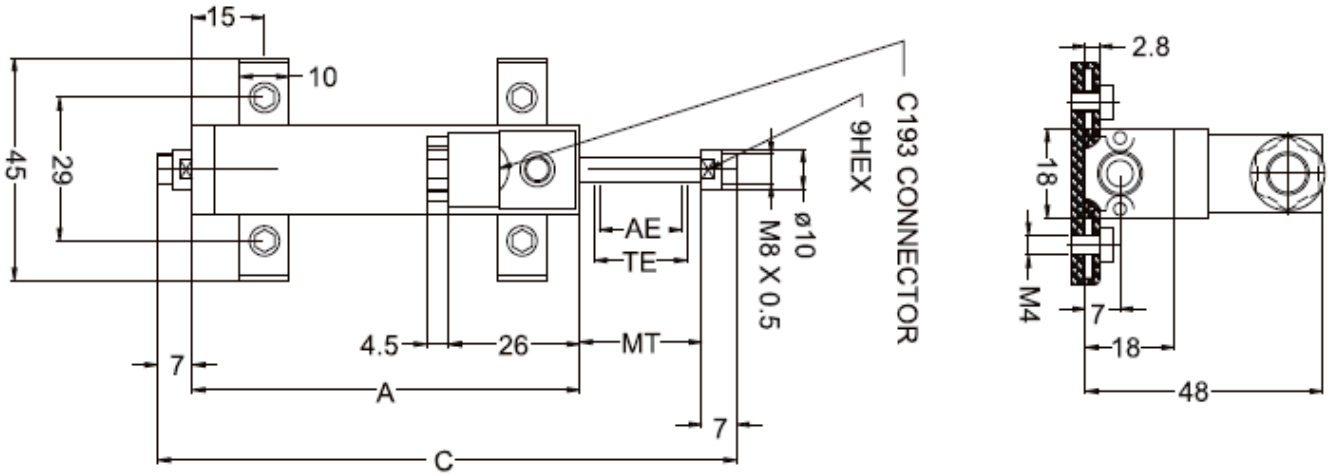

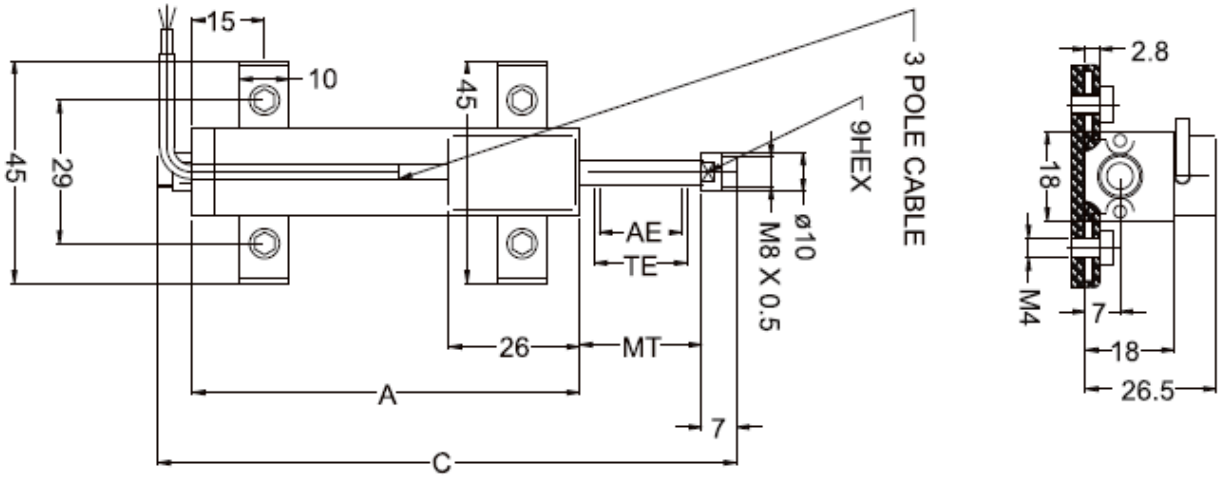

ELECTRICAL CONNECTIONS

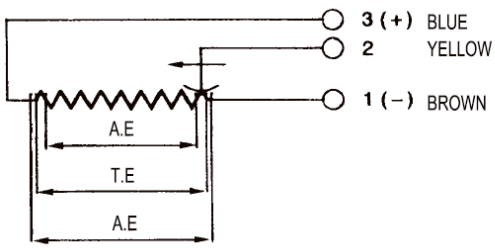

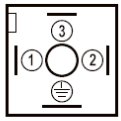

Connector Plug
Pin Assignment

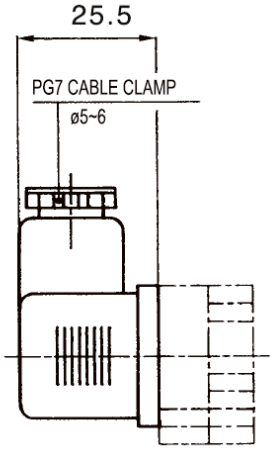

SPECIFICATIONS

LINEARITY	0.05%
MAX VOLTAGE	60V
PROTECTION	IP40 (Option - IP65)
INSULATION RESISTANCE	>500V
MAX DISPLACE SPEED	5m/s
LIFE	>100x10^6 Cycles
CASE MATERIAL	Anodized Aluminium, Nylon
CONTROL ROD	Stainless Steel
RESISTANCE ELEMENT	Conductive Plastic
MECH MOUNTING	Variable Length Brackets